Maths

Week 2: Wednesday 6th May 2020.

Today we are going to look at 3D shapes and their properties.

Properties of 3D shapes

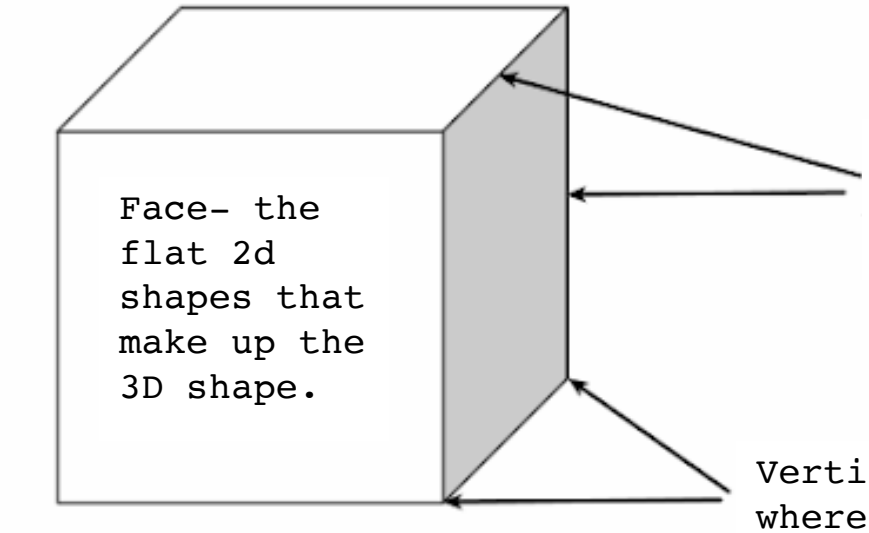

Task 1:

Here are the names of 3D shapes: cube, cuboid, cone, sphere cylinder, square based pyramid and a triangular based pyramid.

Can you find an example of each shape around your house?

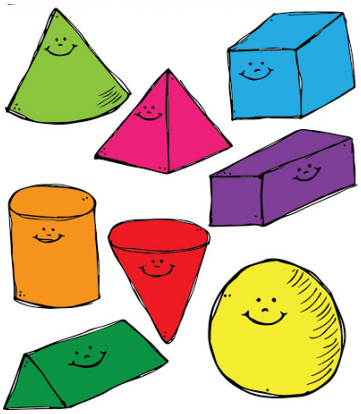

Task 2:

Can you make labels to show where the edges, faces and vertices are on each of the shapes?

Challenge: Can you count how many faces, edges and vertices each shape has and write it down.